ECP28 3S4 C

TWO BEARING MOMENTS OF INERTIA

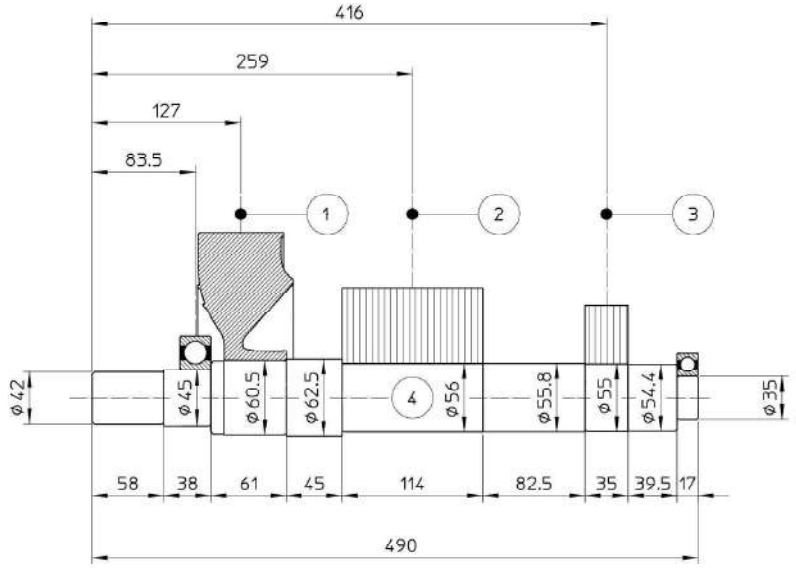

POS.	COMPONENT	WEIGHT (kg)	J (kgm^2)
1	FAN	0.7	0.0046
2	MAIN ROTOR	17.2	0.0690
3	EX. ROTOR	4.4	0.0138
4	SHAFT	8.7	0.0034
TOTAL		31.0	0.0908

TWO BEARING DIMENSIONS

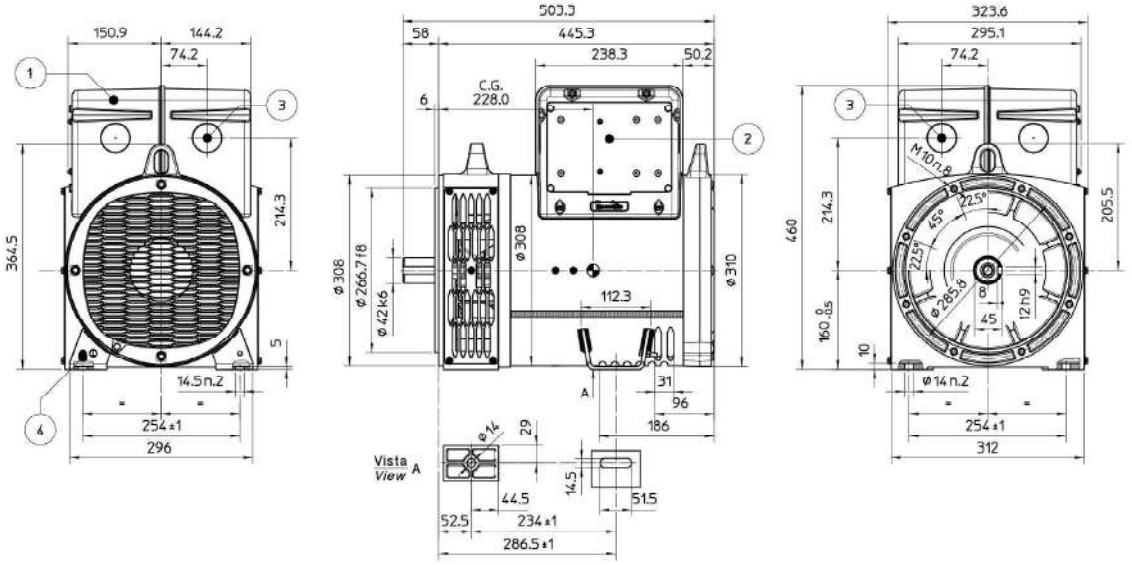

1) COPERCHIO REMOVIBILE PER ACCESSO AI TERMINALI PRINCIPALI
REMOVABLE COVER FOR ACCESS TO MAIN TERMINALS

2) PANNELLO REMOVIBILE PER ACCESSO AL REGOLATORE
REMOVABLE PANEL FOR ACCESS TO AVR

3) PRE-TAGLIO PER INGRESSO CAVI ø48mm
PRE-CUT FOR CABLE ENTRY ø48mm

4) VITE M6 PER MESSA A TERRA
SCREW M6 FOR GROUNDING

C.G.= GRAVITY CENTER

ECP28 3S4 C

SINGLE BEARING MOMENTS OF INERTIA

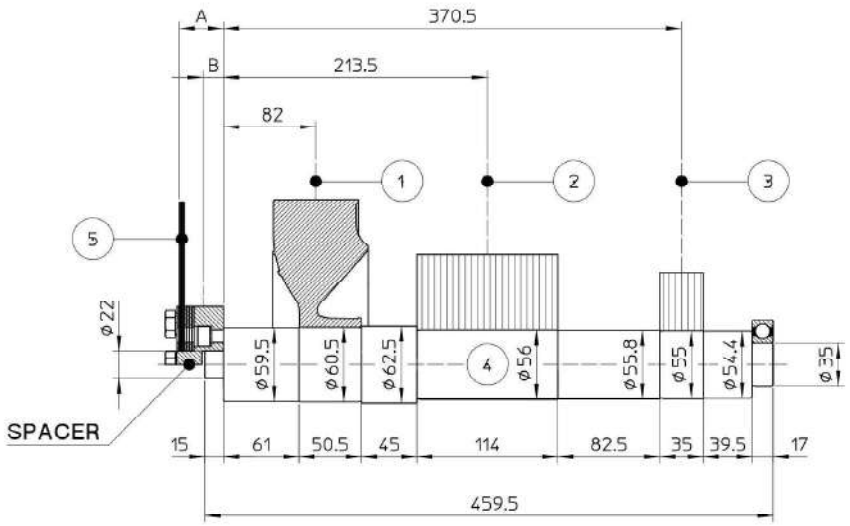

POS.	COMPONENT	WEIGHT (kg)	J (kgm^2)
1	FAN	0.7	0.0040
2	MAIN ROTOR	17.2	0.0690
3	EX. ROTOR	4.4	0.0138
4	SHAFT	8.7	0.0036
TOTAL		31.0	0.0910

SAE N°	5 SHAFTS COUPLING FLEX PLATE			
	A	B	WEIGHT kg	J kgm^2
6 1/2	4	2	1.4	0.0066
7 1/2	4	2	1.7	0.0104
8	35.6	28.3	2.8	0.0158
10	27.6	22.9	3.3	0.0303
11 1/2	14	11.2	3.6	0.0471

SINGLE BEARING DIMENSIONS

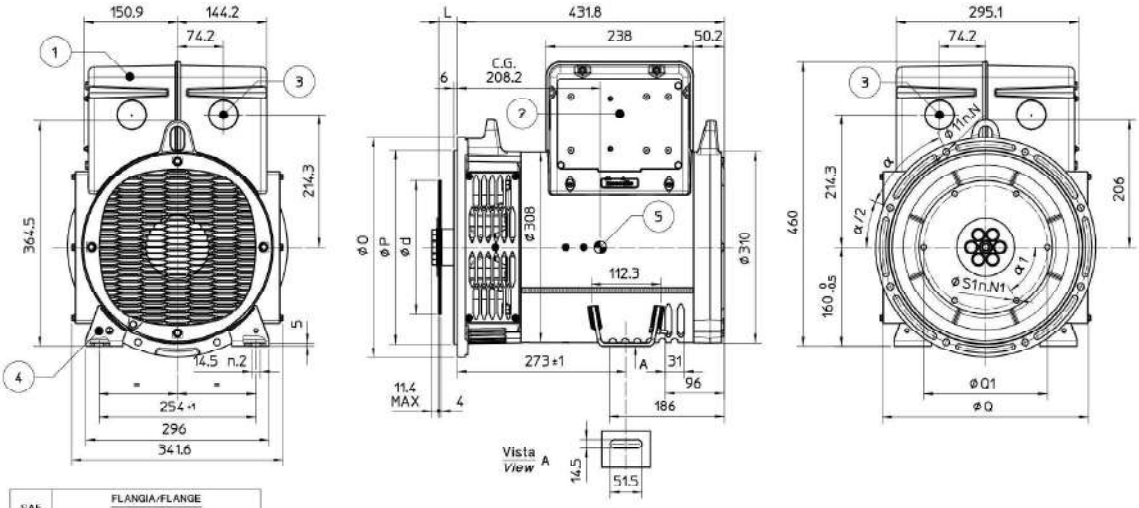

SAE N.	FLANGIA/FLANGE BRIDE/FLANSCH				
	O	P	Q	α	N
5	356	314.3	333.4	45°	8
4	403	362.0	381.0	30°	12
3	451	409.6	428.6	30°	12
2	490	447.7	466.7	30°	12

SAE N.	GIUNTI A DISCHI / DISC COUPLING DISQUE DE MONOPALIER / SCHEIBENKUPPLUNG					
	d	L	Q1	S1	α1	N1
6 1/2	215.90	30.2	200.00	9	60°	6
7 1/2	241.30	30.2	222.25	9	45°	8
8	263.52	62.0	244.47	11	60°	6
10	314.32	53.8	295.27	11	45°	8
11 1/2	352.42	39.6	333.37	11	45°	8

1) COPERCHIO REMOVIBILE PER ACCESSO AI TERMINALI PRINCIPALI
REMOVABLE COVER FOR ACCESS TO MAIN TERMINALS

2) PANNELLO REMOVIBILE PER ACCESSO AL REGOLATORE
REMOVABLE PANEL FOR ACCESS TO AVR

3) PRE-TAGLIO PER INGRESSO CAVI ø48mm
PRE-CUT FOR CABLE ENTRY ø48mm

4) VITE M6 PER MESSA A TERRA
SCREW M6 FOR GROUNDING

5) CENTRO DI GRAVITA' IN CONFIGURAZIONE SAE 3 VOLANO 11.5
GRAVITY CENTER IN CONFIGURATION SAE 3 FLYWHEEL 11.5

C.G.= GRAVITY CENTER