ECP3 1S4 C

TWO BEARING MOMENTS OF INERTIA

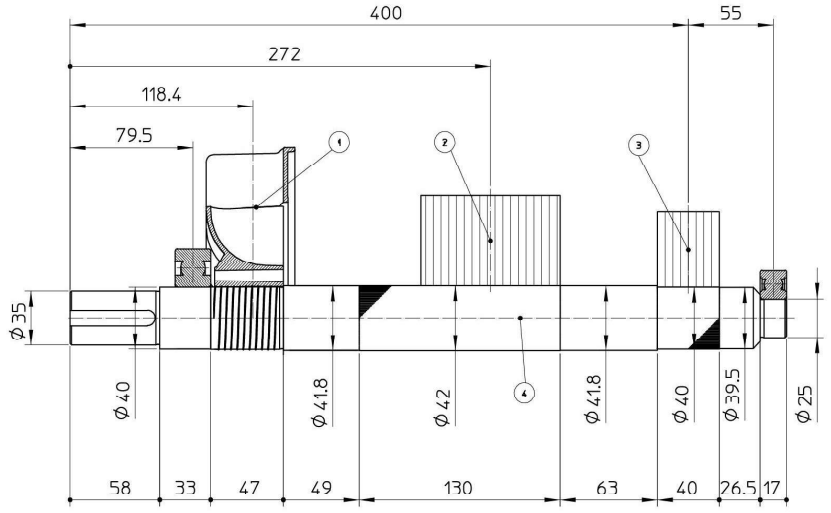

POS.	COMPONENT	WEIGHT [kg]	J [kg m²]
1	FAN	0.41	0.00207
2	MAIN ROTOR	12.32	0.03773
3	EX. ROTOR	4.34	0.01118
4	SHAFT	4.45	0.00091
TOTAL		21.52	0.05189

TWO BEARING DIMENSIONS

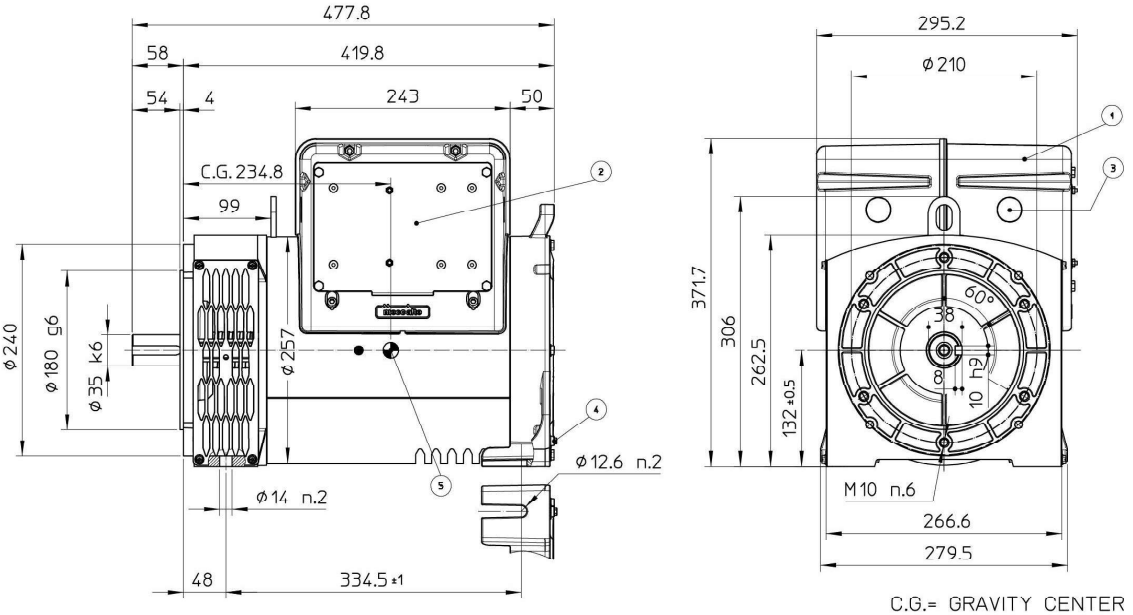

C.G.= GRAVITY CENTER

1)	COPERCHIO REMOVIBILE PER ACCESSO AI TERMINALI PRINCIPALI *REMOVABLE COVER FOR ACCESS TO MAIN TERMINALS*
2)	PANNELLO REMOVIBILE PER ACCESSO AL REGOLATORE *REMOVABLE PANEL FOR ACCESS TO AVR*
3)	PRE-TAGLIO PER INGRESSO CAVI Ø28mm *PRE-CUT FOR CABLE ENTRY Ø28mm*
4)	VITE M4 PER MESSA A TERRA *SCREW M4 FOR GROUNDING*

ECP3 1S4 C

SINGLE BEARING MOMENTS OF INERTIA

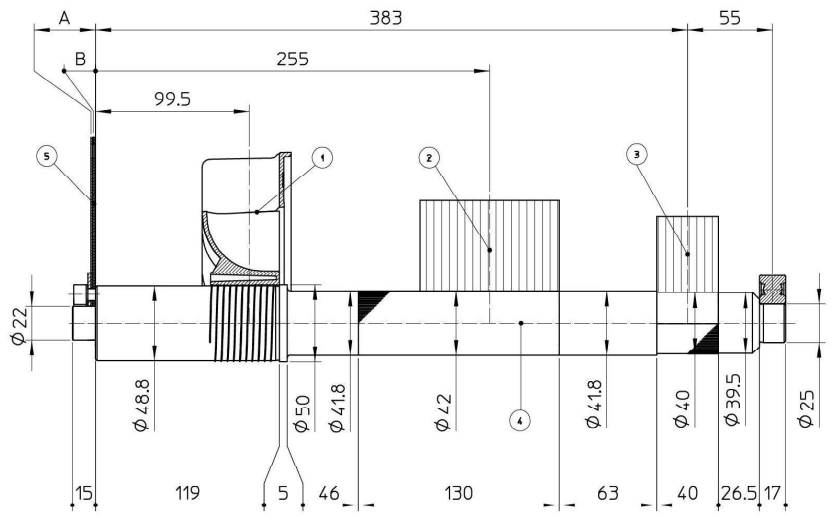

POS.	COMPONENT	WEIGHT [kg]	J [kg m²]
1	FAN	0.39	0.00206
2	MAIN ROTOR	12.32	0.03773
3	EX. ROTOR	4.34	0.01118
4	SHAFT	5.02	0.00121
TOTAL		22.07	0.05218

SAE N°	5 SHAFTS COUPLING FLEX PLATE			
	A	B	WEIGHT [kg]	J [kg m²]
6 1/2	3	1.5	0.97	0.00496
7 1/2	3	1.5	1.18	0.00770
8	34.6	29.5	1.76	0.01114
10	26.6	23.4	2.14	0.02220
11 1/2	13	10.8	2.59	0.03512

SINGLE BEARING DIMENSIONS

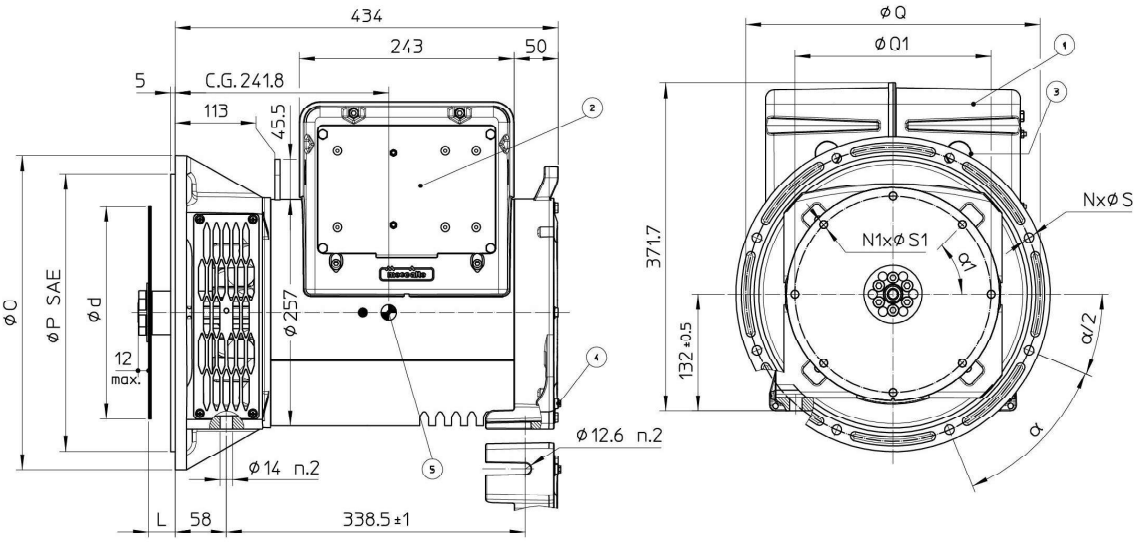

SAE N.	GIUNTI A DISCHI / DISC COUPLING DISCQUE DE MONOPALIER / SCHEIBENKUPPLUNG					
	d	L	Q1	N1	S1	α1
6 1/2	215.9	30.2	200	6	9	60°
7 1/2	241.3	30.2	222.25	8	9	45°
8	263.52	62	244.47	6	11	60°
10	314.32	53.8	295.27	8	11	45°
11 1/2	352.42	39.6	333.37	8	11	45°

SAE N.	FLANGIA / FLANGE BRIDE / FLANSCH					
	O	P	Q	S	N	α
6	308	266.7	285.75	11	8	45°
5	356	314.3	333.4	11	8	45°
4	403	362	381	11	12	30°
3	451	409.6	428.6	11	12	30°

C.G.= GRAVITY CENTER

1) COPERCHIO REMOVIBILE PER ACCESSO AI TERMINALI PRINCIPALI
REMOVABLE COVER FOR ACCESS TO MAIN TERMINALS
2) PANNELLO REMOVIBILE PER ACCESSO AL REGOLATORE
REMOVABLE PANEL FOR ACCESS TO AVR
3) PRE-TAGLIO PER INGRESSO CAVI Ø28mm
PRE-CUT FOR CABLE ENTRY Ø28mm
4) VITE M4 PER MESSA A TERRA
SCREW M4 FOR GROUNDING
5) CENTRO DI GRAVITA' IN CONFIGURAZIONE SAE 5 VOLANO 7.5
GRAVITY CENTER IN CONFIGURATION SAE 5 FLYWHEEL 7.5